DS-7200HUHI-K1 SERIES
TURBO HD DVR

Key Feature

- H.265 Pro+/H.265 Pro/H.265 video compression
- HDTVI/AHD/CVI/CVBS/IP video input
- Audio via coaxial cable
- Up to 8/16-ch IP camera inputs (up to 8 MP)
- Max. 800 m for 1080p and 1200 m for 720p HDTVI signal transmission
- Up to 10 TB capacity per HDD

Compression and Recording

- H.265 Pro+ can be enabled to improve encoding efficiency and reduce data storage costs
- Recording at up to 8 MP resolution

Storage and Playback

- Smart search for efficient playback
- Support the third party cloud storage

Smart Function

- Support multiple VCA (Video Content Analytics) events for both analog and smart IP cameras
- Support line crossing detection and intrusion detection of all channels, and 2-ch sudden scene change detection

Network & Ethernet Access

- Hik-Connect & DDNS (Dynamic Domain Name System) for easy network management
- Max. 32/64 Mbps incoming bandwidth and output bandwidth limit configurable

Specification

Model	DS-7204HUHI-K1	DS-7208HUHI-K1
Perimeter Protection[1]		
Line Crossing Detection/ Intrusion Detection	2-ch Enhanced VCA mode on: 4-ch	2-ch Enhanced VCA mode on: 8-ch
Recording		
Video compression	H.265 Pro+/H.265 Pro/H.265/H.264+/H.264	
Encoding resolution	When 8 MP Lite mode is not enabled: 8 MP/5 MP/3K/4 MP/3 MP/1080p/720p/WD1/4CIF/VGA/CIF When 8 MP Lite mode is enabled: 8 MP Lite/5 MP/4 MP/3MP/1080P/720P/WD1/4CIF/VGA/CIF	
Frame rate	Main stream: When 8 MP Lite mode is not enabled: 8 MP@8 fps/5 MP@12 fps/3K@12 fps/4 MP@15 fps/3 MP@18 fps 1080p/720p/WD1/4CIF/VGA/CIF@25 fps (P)/30 fps (N) ***: 8 MP@8 fps is only available for channel 1 of DS-7204HUHI-K1.** When 8 MP Lite mode is enabled: 8 MP Lite/5 MP@12 fps/4 MP/3 MP/1080P/720P/WD1/4CIF/VGA/CIF@15 fps ***: 8 MP Lite is only available for DS-7204HUHI-K1.**	
	Sub-stream: WD1/4CIF/CIF@25fps (P)/30fps (N)	
Video bit rate	32 Kbps to 10 Mbps	
Dual stream	Support	
Stream type	Video, Video & Audio	
Audio compression	G.711u	
Audio bit rate	64 Kbps	
Video and Audio		
IP video input[2]	2-ch (up to 6-ch) Enhanced IP mode on: 4-ch (up to 8-ch), each up to 4 Mbps	4-ch (up to 12-ch) Enhanced IP mode on: 8-ch (up to 16-ch), each up to 4 Mbps
	Up to 8 MP resolution	
	Support H.265+/H.265/H.264+/H.264 IP cameras	
Analog video input	4-ch	8-ch
	BNC interface (1.0 Vp-p, 75 Ω), supporting coaxitron connection	
HDTVI input	8 MP, 5 MP, 4 MP, 3 MP, 1080p30, 1080p25, 720p60, 720p50, 720p30, 720p25	
AHD input	5 MP, 4 MP, 1080p25, 1080p30, 720p25, 720p30	
HDCVI input	5 MP, 4 MP, 1080p25, 1080p30, 720p25, 720p30	
CVBS input	PAL/NTSC	
CVBS output	1-ch, BNC (1.0 Vp-p, 75 Ω), resolution: PAL: 704 × 576, NTSC: 704 × 480	
VGA output	1-ch, 1920 × 1080/60Hz, 1280 × 1024/60Hz, 1280 × 720/60Hz, 1024 × 768/60Hz	
HDMI output	1-ch, 1920 × 1080/60Hz, 1280 × 1024/60Hz, 1280 × 720/60Hz, 1024 ×	1-ch, 4K (3840 × 2160)/30Hz, 2K (2560 × 1440)/60Hz, 1920 × 1080/60Hz, 1280 ×

	768/60Hz	1024/60Hz, 1280 × 720/60Hz, 1024 × 768/60Hz
Audio input	4-ch, RCA (2.0 Vp-p, 1 KΩ)	
	4-ch via coaxial cable	8-ch via coaxial cable
Audio output	1-ch, RCA (Linear, 1 KΩ)	
Two-way audio	1-ch, RCA (2.0 Vp-p, 1 KΩ) (using the first audio input)	
Synchronous playback	4-ch	8-ch
Network		
Total bandwidth	96 Mbps	128 Mbps
Incoming bandwidth (Enhanced IP mode)	Up to 32 Mbps	Up to 64 Mbps
Remote connection	32	64
Network protocol	TCP/IP, PPPoE, DHCP, Hik-Connect, DNS, DDNS, NTP, SADP, NFS, iSCSI, UPnP™, HTTPS, ONVIF	
Network interface	1, RJ45 10M/100M self-adaptive Ethernet interface	1, RJ45 10M/100M/1000M self-adaptive Ethernet interface
Auxiliary interface		
SATA	1 SATA interface	
Capacity	Up to 10 TB capacity for each disk	
Serial interface	RS-485 (half-duplex)	
USB interface	2 × USB 2.0	Front panel: 1 × USB 2.0 Rear panel: 1 × USB 3.0
Alarm in/out	4/1	8/4
General		
Power supply	12 VDC, 1.5 A	12 VDC, 3.33 A
Consumption (without HDD)	≤ 10 W	≤ 20 W
Working temperature	-10 °C to +55 °C (+14 °F to +131 °F)	
Working humidity	10% to 90%	
Dimension (W × D × H)	315 × 242 × 45 mm (12.4 × 9.5 × 1.8 inch)	
Weight (without HDD)	≤ 1.16 kg (2.6 lb)	≤ 2 kg (4.4 lb)

Note:

1: Enabling enhanced VCA mode will maximize the connectable channel number for perimeter protection (line crossing detection and intrusion detection), but disable 2K/4K HDMI output resolution and 4 MP/5 MP/8 MP signal input.

2: Enhanced IP mode might be conflicted with smart events (perimeter protection) or other functions, please refer to the user manual for details.

Physical Interface

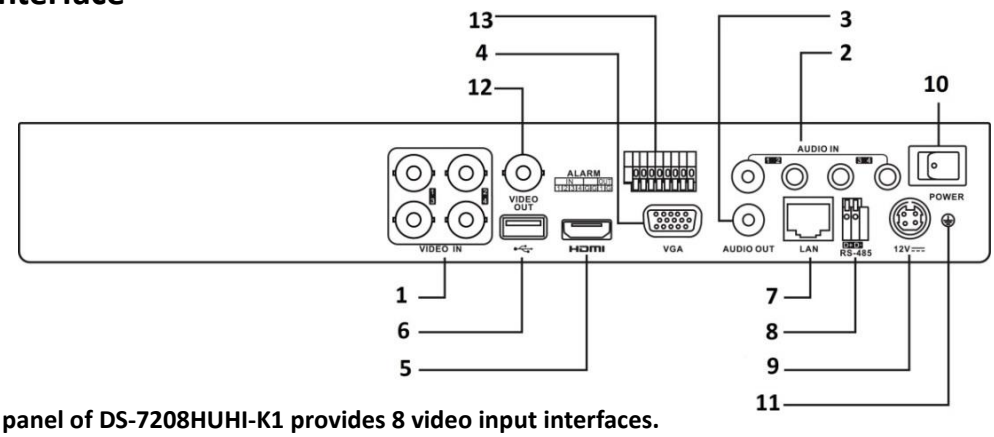

***: The rear panel of DS-7208HUHI-K1 provides 8 video input interfaces.**

No.	Description	No.	Description
1	Video and Coaxial Audio In	8	RS-485 Serial Interface
2	AUDIO IN, RCA Connector	9	12 VDC Power Input
3	AUDIO OUT, RCA Connector	10	Power Switch
4	VGA Interface	11	GND
5	HDMI Interface	12	VIDEO OUT
6	USB Interface	13	Alarm In/Out
7	LAN Network Interface		

Available Model

DS-7204HUHI-K1, DS-7208HUHI-K1

Distributed by

Headquarters
No.555 Qianmo Road, Binjiang District,
Hangzhou 310051, China
T +86-571-8807-5998
overseasbusiness@hikvision.com

Hikvision USA
T +1-909-895-0400
sales.usa@hikvision.com

Hikvision Europe
T +31-23-5542770
sales.eu@hikvision.com

Hikvision UK & Ireland
T +01628-902140
sales.uk@hikvision.com

Hikvision UAE
T +971-4-4432090
salesme@hikvision.com

Hikvision Russia
T +7-495-669-67-99
saleru@hikvision.com

Hikvision Australia
T +61-2-8599-4233
salesau@hikvision.com

Hikvision Italy
T +39-0438-6902
info.it@hikvision.com

Hikvision South Africa
Tel: +27 (10) 0351172
sale.africa@hikvision.com

Hikvision Singapore
T +65-6684-4718
sg@hikvision.com

Hikvision Korea
T +82-(0)31-731-8817
sales.korea@hikvision.com

Hikvision India
T +91-22-28469900
sales@pramahikvision.com

Hikvision Brazil
T +55 11 3318-0050
Latam.support@hikvision.com

Hikvision France
T +33(0)1-85-330-450
info.fr@hikvision.com

Hikvision Spain
T +34-91-737-16-55
info.es@hikvision.com

Hikvision Poland
T +48-22-460-01-50
info.pl@hikvision.com

Hikvision Canada
T +1-866-200-6690
sales.canada@hikvision.com

Hikvision Turkey
T +90 (216)521 7070- 7074
sales.tr@hikvision.com

Hikvision Kazakhstan
T +7-727-9730667
nikia.panfilov@hikvision.ru

Hikvision Tashkent
T +99-87-1238-9438
uzb@hikvision.ru

Hikvision Indonesia
T +62-21-2933759
Sales.Indonesia@hikvision.com

Hikvision Thailand
T +662-275-9949
sales.thailand@hikvision.com

Hikvision Malaysia
T +601-7652-2413
sales.my@hikvision.com

Hikvision Vietnam
T +84-974270888
sales.vt@hikvision.com

Hikvision Hong Kong
T +852-2151-1761
info.hk@hikvision.com

Hikvision Colombia
sales.colombia@hikvision.com

04250002010224

© Hikvision Digital Technology Co., Ltd. 2020 | Data subject to change without notice |