DH-IPC-HFW4221E

2MP Full HD WDR Network Small IR Bullet Camera

Features

- 1/2.7" 2Megapixel progressive scan CMOS
- Support H.264&MJPEG dual codec
- Max 25/30fps@1080P(1920×1080)
- Smart Detection supported
- WDR(120dB), Day/Night(ICR), 3DNR, AWB, AGC, BLC
- Multiple network monitoring: Web viewer, CMS(DSS/PSS) & DMSS
- 3.6mm fixed lens (6mm optional)
- Max. IR LEDs Length 40m
- IP67, PoE

DH-IPC-HFW4221E

Technical Specifications

Model		DH-IPC-HFW4221E
Camera		
Image Sensor		1/2.7" 2Megapixel progressive scan CMOS
Effective Pixels		1920(H)x1080(V)
Scanning System		Progressive
Electronic Shutter Speed		Auto/Manual, 1/3(4)~1/100000s
Min. Illumination		0.01Lux/F2.0 (Color), 0Lux/F2.0(IR on)
S/N Ratio		More than 50dB
Video Output		N/A
Camera Features		
Max. IR LEDs Length		40m
Day/Night		Auto(ICR)/Color/B/W
Backlight Compensation		BLC / HLC / WDR(120dB)
White Balance		Auto/Sunny/Night/Outdoor/Customized
Gain Control		Auto/Manual
Noise Reduction		3D
Privacy Masking		Up to 4 areas
Lens		
Focal Length		3.6mm (6mm optional)
Max Aperture		F2.2(F2.0)
Focus Control		Manual
Angle of View		H:93°(63°)
Lens Type		Fixed lens
Mount Type		Board-in Type
Video		
Compression		H.264/H.264H/H.264B/MJPEG
Resolution		1080P(1920×1080)/ 720P(1280×720) / D1(704×576/704×480) / CIF(352×288/352×240)
Frame Rate	Main Stream	1080P/720P(1~25/30fps)
	Sub Stream	D1/CIF(1~25/30fps)
	Third Stream	720P(1~13/4fps)
Bit Rate		H.264: 32Kbps~10Mbps
Corridor Mode		Support
Audio		
Compression		N/A
Interface		N/A
Smart Function		
Smart detection		Tripwire
		Intrusion
		Abandoned/Missing
		Scene Change
		Audio detect

	Face detect
Network	
Ethernet	RJ-45 (10/100Base-T)
Wi-Fi	N/A
Protocol	IPv4/IPv6, HTTP, HTTPS, SSL, TCP/IP, UDP, UPnP, ICMP, IGMP, SNMP, RTSP, RTP, SMTP, NTP, DHCP, DNS, PPPOE, DDNS, FTP, IP Filter, QoS, Bonjour,802.1x
Compatibility	ONVIF, PSIA, CGI
Max. User Access	20 users
Smart Phone	iPhone, iPad, Android, Windows Phone
Auxiliary Interface	
Memory Slot	N/A
RS485	N/A
Alarm	N/A
PIR Sensor Range	N/A
General	
Power Supply	DC12V, PoE (802.3af)
Power Consumption	< 6.5W
Working Environment	-30°C~+60°C, Less than 95% RH
Ingress Protection	IP67
Vandal Resistance	N/A
Dimensions	70mm×70mm×180mm
Weight	0.4kg(0.528kg with packaging)

DH-IPC-HFW4221E

Dimensions (mm)

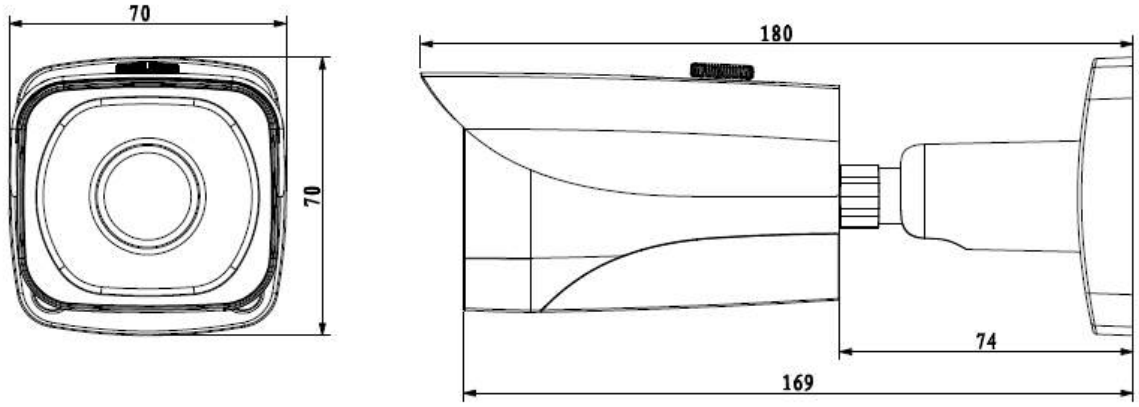

Accessories (optional)

PFA121	PFA151	PFA152

Dahua Technology Co., Ltd.
1199 BinAn Road, Binjiang District, Hangzhou, China
Tel: +86-571-87688883
Fax: +86-571-87688815
Email:overseas@dahuatech.com
www.dahuasecurity.com

*Design and specifications are subject to change without notice.

© 2015 Dahua Technology Co., Ltd.